ER20-1100

EFORT

ER20-1100,
Maxium payload 20 kg with maxium reach 1143 mm.

Highlights

Thanks to the optimization of stiffness and inertia brought by the new mechanical design, with advanced trajectory algorithm. The takt improved by 20%-30%; 40% less monuting size of the base (comparing the previous types) plus compact cabinet design helps customers deploy the production line with more flexibility; IP67 wrist, high protection grade, to overcome harsh environment;

Applications

It can be used in handling operations, assembling, grinding, polishing, deburring, etc.

Industries

Suitable for PCB, metal parts, photovoltaic and other industries.

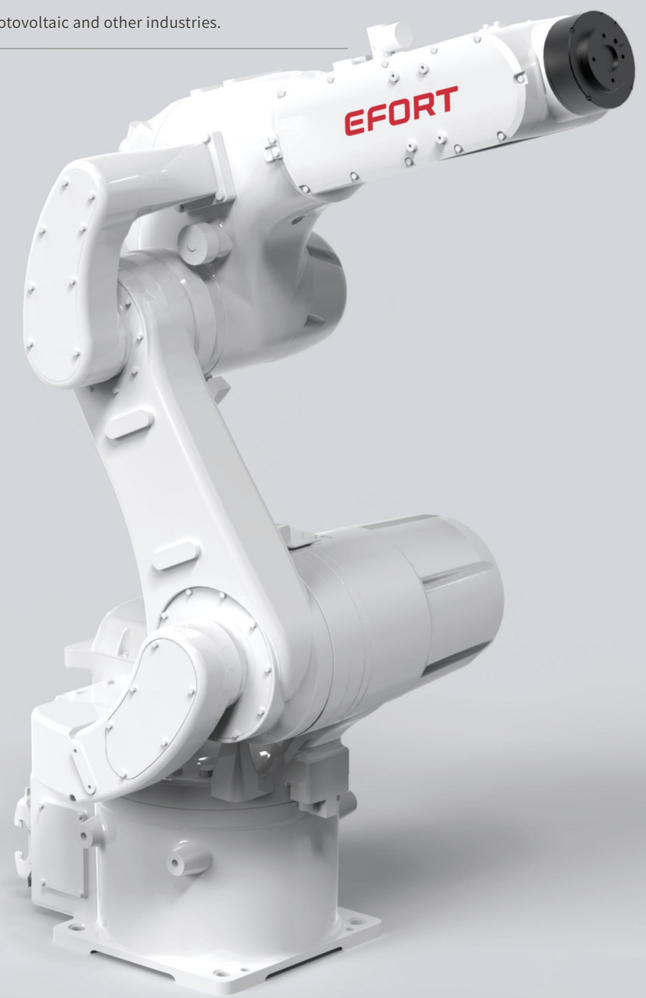

EFORT INTELLIGENT EQUIPMENT CO.,LTD.
PHONE: (00 86) 400-052-8877
ADDRESS: No.96 East Wanchun Road, China(Anhui) Pilot Free Trade Zone Wuhu Area, Wuhu, Anhui Province, China
WWW.EFORT.COM.CN

SPECIFICATIONS

Model		ER20-1100
Type		Articulated
Controlled axes		6 Axes
Max. payload on wrist		20 kg
Repeatability		±0.03 mm
Robot weight		145 kg
Reach		1143 mm
Robot IP grade		IP65/IP67 (Wrist)
Cabinet IP grade		IP20/IP54 (Optional)
Drive mode		AC servo drive
Installation		Floor, Upside-down, Wall, Angle
Installation enviroment	**Ambient temperature**	0~45 °C
	Ambient humidity	RH≤80% (No dew nor frost allowed)
	Vibration acceleration	4.9 m/s^2 (<0.5 G)

Allowable load moment at wrist	**J4**	42 N·m
	J5	42 N·m
	J6	20 N·m
Allowable load inertia at wrist	**J4**	2 kg·m^2
	J5	2 kg·m^2
	J6	0.7 kg·m^2
Maximum speed	**J1**	260°/sec
	J2	255°/sec
	J3	210°/sec
	J4	450°/sec
	J5	450°/sec
	J6	600°/sec
Motion range	**J1**	±170°
	J2	+83°/-160°
	J3	+175°/-85°
	J4	±190°
	J5	±130°
	J6	±360°

OPERATING SPACE

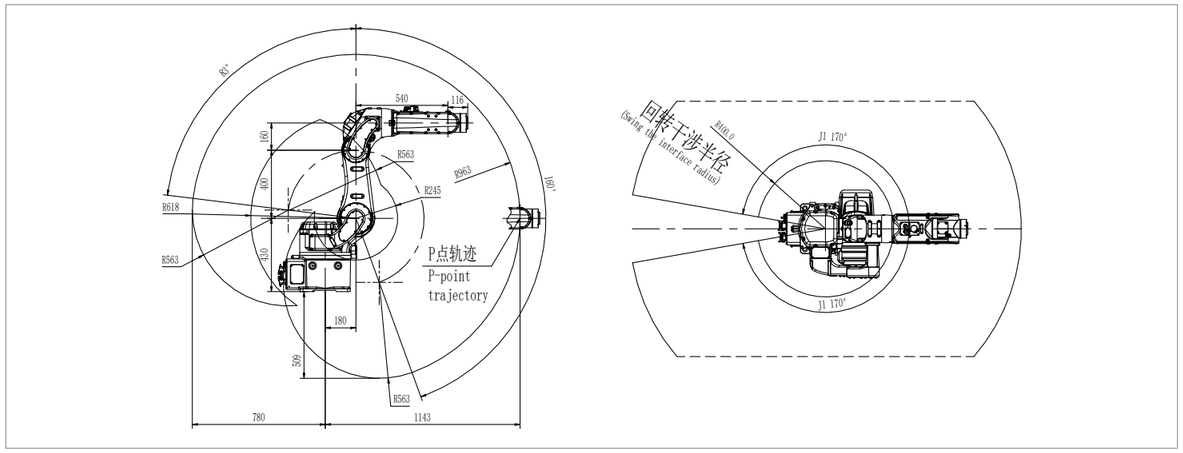

BASE MOUNTING SIZE

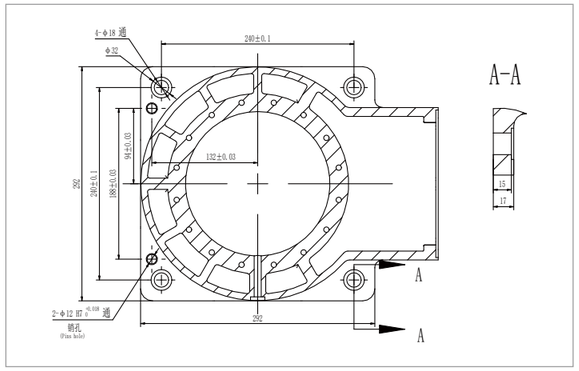

END FLANGE MOUNTING SIZE

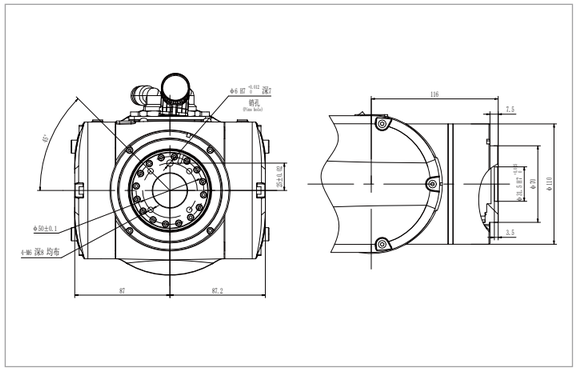

Information Release Time 2024/06